moody z10

Category

D) Lighting Controllers & Media Convertors

Description

Wall mount DALI & DMX panel controller for 10 zones of RGB with illuminated rotary control

Mechanical

- Housing: UK '1-Gang' Style Panel
- Material: White ABS (UV stable)
- Overall Dimensions: 86mm (H) x 86mm (W) x 40mm (D)
- Depth behind mounting: 15.2mm
- Mounting: UK '1-Gang' Back Box 35mm (supplied)
- Mounting screw centres: 60.6mm
- Mass: 0.11kg
- Country of Manufacture: United Kingdom

Control / Isolation

- Colour control: 30 DMX channels or 30 DALI consecutive short addresses
- Output Protocols: DMX512-A, DALI
- DMX Output connector: (1) 3-pin screw terminal
- 0.2-1.5mm² (30-16AWG) solid conductors
- 0.2-1.0mm² (30-16AWG) stranded conductors
- DMX Output isolation: Ground referenced
- DALI Output connector: (1) 2-pin screw terminal
- 0.2-1.5mm² (30-16AWG) solid conductors
- 0.2-1.0mm² (30-16AWG) stranded conductors
- DALI Output isolation: 2kV Opto-isolated

Power & Electrical

- Input Voltage: 9 to 24 VDC
- Input Connector: (1) 2-pin Screw Terminal DC Voltage Input
- 0.2-1.5mm² (30-16AWG) solid conductors
- 0.2-1.0mm² (30-16AWG) stranded conductors
- Input Power (max): 500mW
- Duty Cycle: 100% @ 25°C

Programming

- (1) Rotary dial with programming mode (enter/exit by holding down for 3 secs)
- Set the hue and saturation of 10 independent zones
- (1) Rear jumper for programming inhibit

Environmental

- Operating Temperature: 0°C to 40°C
- Storage Temperature: -10°C to +50°C
- Operating Relative Humidity (max): 80% Non-Condensing
- IP Rating: IP20 Indoor Use Only
- Certification: CE, WEEE, RoHS
- Warranty: 2 Year (Return to Base)

Package Contents

- moody z10
- Quick Start Guide
- Back Box

User Interface / Indication

- (1) Rotary dial for Zone 1 colour control with push on/off
- LED indication: shows colour of Zone 1

Ordering Info

Product Code: moody z10

Accessories (not included): PSU

Mounting Drawing

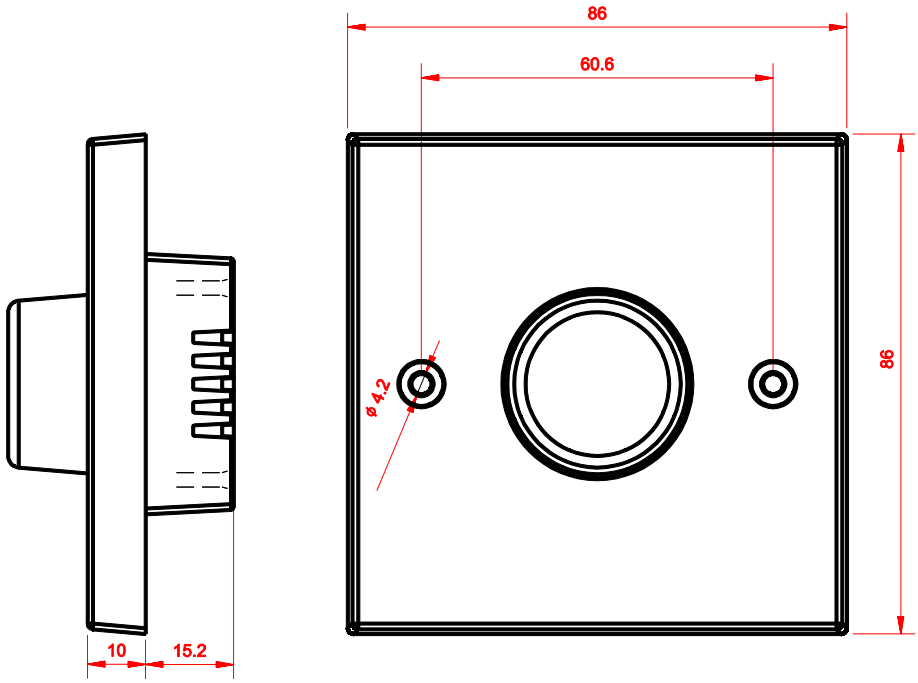

Application Drawing

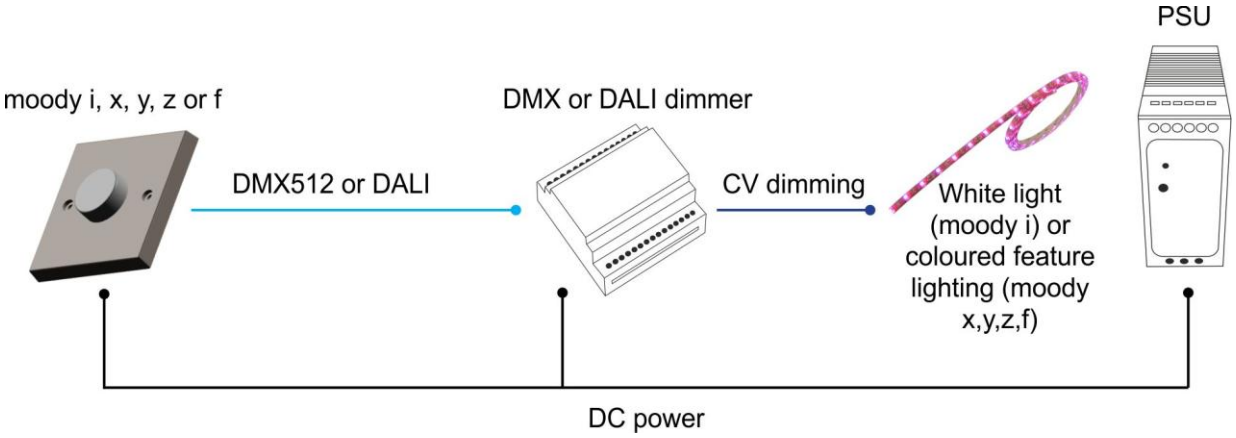

Artistic Licence Engineering Ltd

Studio 1, Spectrum House
32-34 Gordon House Road
London, NW5 1LP
United Kingdom

Telephone +44 (0)20 8863 4515
Fax +44 (0)20 8426 0551

Email: Sales@ArtisticLicence.com
www.ArtisticLicence.com

Customer support and knowledge base:
www.ArtisticLicence.com/support.html

All products are covered from date of purchase by a two-year return to base warranty.

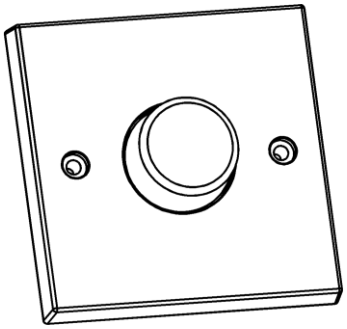

Due to our policy of continuing product improvement, specifications are subject to change without notice.